Water Specialties ML12 Propeller Flow Meter Installation Instructions

INSTALLATION

Flanged end meters: A tube is inserted into a section of open pipe and each flanged end is joined to the existing pipe using the provided gaskets and bolts.

Plain, grooved, or threaded end meters: A tube is inserted into a section of open pipe and each end is joined to the existing pipe as appropriate to its type.

The meter can be installed horizontally, vertically, or inclined on suction or discharge lines. The meter must have a full flow of liquid for proper accuracy. Complete installation, removal, and reinstallation instructions can be found in the meter's Installation, Operation, and Maintenance Manual.

PIPE RUN REQUIREMENTS

Fully opened gate valves, fittings or other obstructions that tend to set up flow disturbances should be a minimum of ten pipe diameters upstream and two pipe diameters downstream from the meter. Installations with less than ten pipe diameters of straight pipe require straightening vanes. Meters with straightening vanes require at least five pipe diameters upstream and two pipe diameters downstream of the meter.

PIPE RUN REQUIREMENTS

Fully opened gate valves, fittings or other obstructions that tend to set up flow disturbances should be a minimum of ten pipe diameters upstream and two pipe diameters downstream from the meter. Installations with less than ten pipe diameters of straight pipe require straightening vanes. Meters with straightening vanes require at least five pipe diameters upstream and two pipe diameters downstream of the meter.

Configuration	A	B
Without straightening vanes	10	1
With straightening vanes	5	1

Dimension C varies depending on meter size.	
Meters 2 - 20"	8"
Meters 24" - 72"	11 ½"

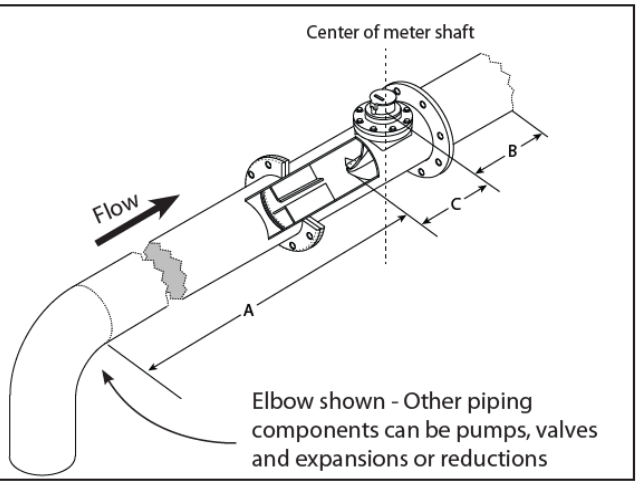

STRAIGHTENING VANES

Special attention should be given to systems using two elbows "out of plane" or devices such as a centrifugal sand separator. These cause swirling flow in the line that affect propeller meters. Well developed swirls can travel up to 100 diameters downstream if unobstructed. Since most installations have less than 100 diameters to work with, straightening vanes become necessary to alleviate the problem.

Straightening vanes will break up most swirls and ensure more accurate measurement. McCrometer actively encourages installing vanes just ahead of the meter. Straightening vanes are available in weld-in and bolt-in.

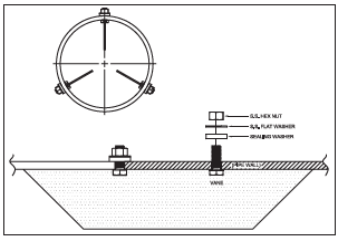

Bolt-in straightening vanes

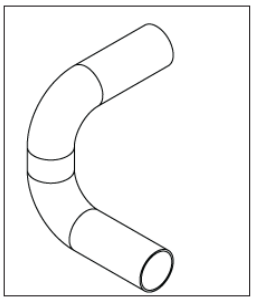

Elbows out of plane

DIMENSIONS

DIMENSIONS

ML12 *ML12D*

Note: Specifications and dimensions for models ML20 and ML20D are the same with the exception of the height of the totalizer or register. ML20 uses a mechanical totalizer, while the ML20D uses the FlowCom digital register.

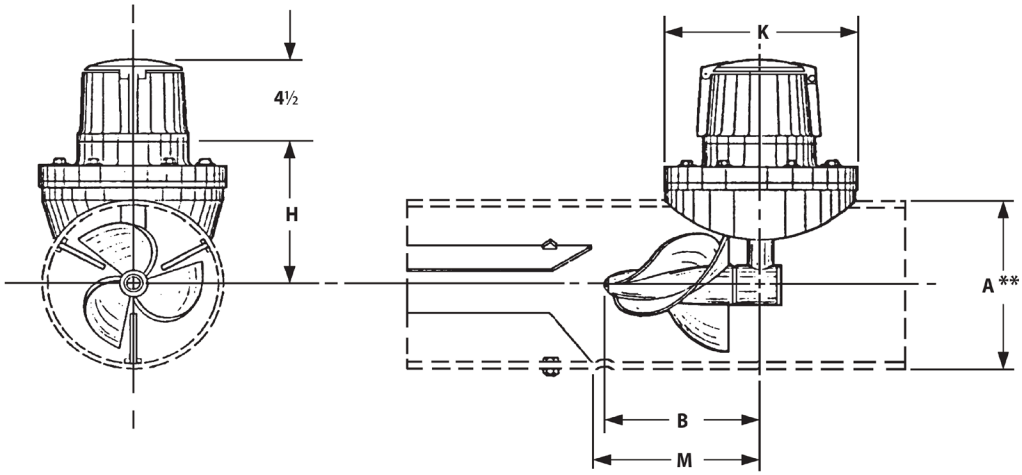

** PLEASE SPECIFY PIPE I.D. AND O.D.

Meter & Pipe size (inches)	Flow Ranges, GPM		Dimensions					Est. Shipping Weight (lbs.)
	Standard Construction Min - Max - Int	High Velocity Construction Min - Max	A	B	H	K	M	
4	55-500-700	200-700	4½	8	53/16	9	10	55
6	120-1200-1500	300-1500	65/8	8	6¼	9	10	55
8	150-1500-2000	400-2500	85/8	8	7¼	9	10	55
10	180-2000-3000	500-3500	10¾	8	8½	11	10	60
12	200-3000-3500	800-5000	12¾	8	9¼	11	10	70

Water Specialties ML12 Weld-On Propeller Flow Meter Accuracy

ML12 SPECIFICATIONS

Performance

Accuracy	Plus or minus 2% of actual flow within the range specified for each meter size.
Pressure Range	Up to 150 PSI maximum working pressure.
Temperature Range	140° F Maximum. Consult factory for special construction for higher temperatures.
Flow Ranges	See Min-Max-Int Flow Ranges column in the table of meter specifications on page 6. • Size and construction are rated for continuous operation. • Min and max flow ranges will vary according to meter size and construction. • Min flow will be higher when auxiliary equipment is added. • Intermittent flow is rated for 10%-15% of the total time the meter is operating. • Consult factory for high velocity construction when intermittent flows are higher than shown in the table of meter specifications on page 6 and/or when longer operating periods are required.